VDI-45 Cross Line Relief 3/8 & ½ BSP

NOM FLOW 45 LPM - WORKING PRESSURE 350 BAR

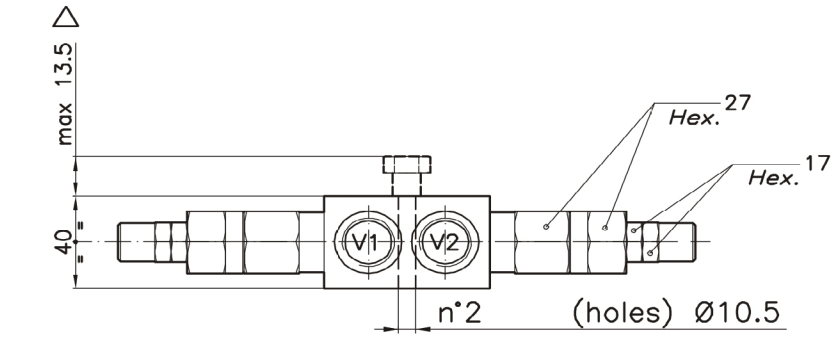

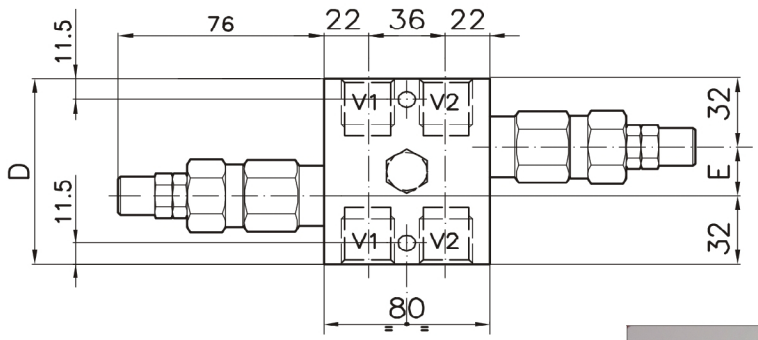

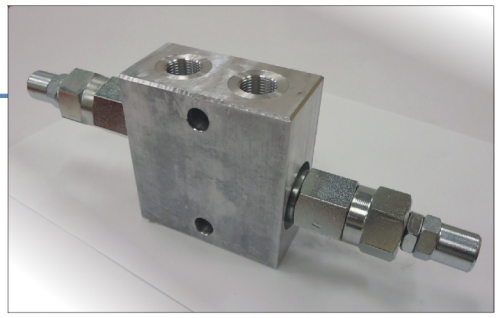

DIMENSIONS

Setting range			F	F	F	Port size V1-V2 GAS (BSPP)
012	019	020	85	21	36	3/8"
013	021	022	85	21	32	1/2"
△ 087	030	086	110	46	40	1/2"

HOW TO ORDER

007 012 0 X 0

Setting range		
012	019	020
013	021	022
⊛ 087	030	086

Setting range 5÷100 bar (blue spring)		Setting range 10÷210 bar (green spring)		Setting range 20÷350 bar (yellow spring)	
Std. bar setting (Q=5 l/1')	Pressure rise - turn of screw	Std. bar setting (Q=5 l/1')	Pressure rise - turn of screw	Std. bar setting (Q=5 l/1')	Pressure rise - turn of screw
80 bar	(--)	180 bar	(--)	320 bar	(--)

Adjustment	
X	Dowel
Y	Handknob
Z	Fixed setting
H	Sealed
K	Sealed